POWDERFLIGHT CONVEYING SYSTEMS

High Output with Versatility

- High output relative to power and cost
- Minimum attrition of fragile particles
- No separation of blended products
- No filtration required at discharge
- Atex Zone 22 model available
- Any angle of operation
- Dust-tight conveying
- Dedicated batches
- Low noise level

UNITRAK POWDERFLIGHT

Striving to exceed our customers' expectations...

POWDERFLIGHT AEROMECHANICAL CONVEYORS

Operating Principle: *Material introduced at the inlet is propelled through the conveying tube, in an aerated or fluid condition by discs on a continuous wire rope.*

- There is no separation of blended products.
- Minimal attrition of fragile particles.
- Filters are not required on the receiving vessel.
- Will operate at any angle.
- Self emptying allows for dedicated batches to be conveyed.

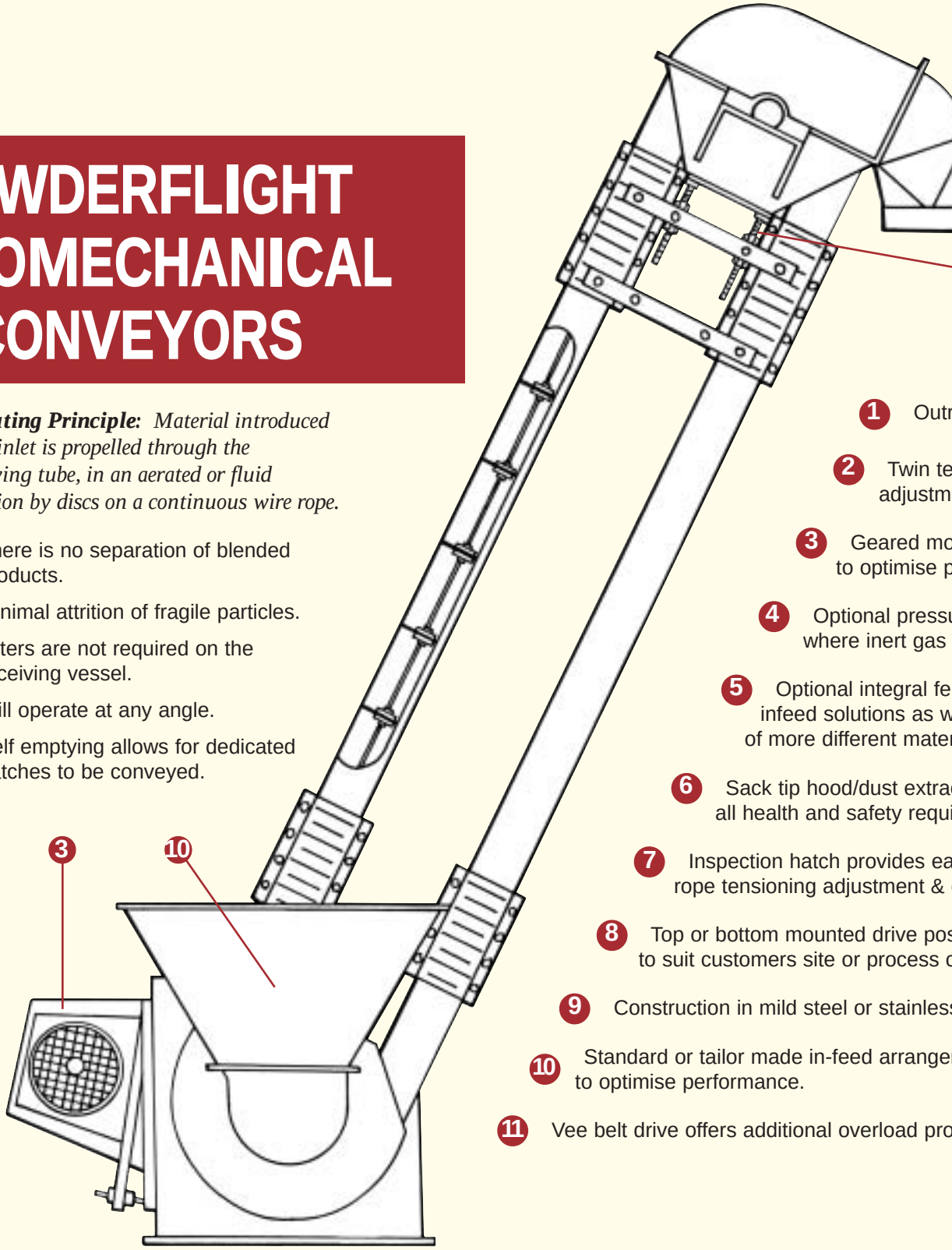

1 Outr

2 Twin te adjustm

3 Geared mo to optimise p

4 Optional pressu where inert gas

5 Optional integral fe infeed solutions as w of more different mater

6 Sack tip hood/dust extra all health and safety requi

7 Inspection hatch provides ea rope tensioning adjustment &

8 Top or bottom mounted drive pos to suit customers site or process c

9 Construction in mild steel or stainless

10 Standard or tailor made in-feed arrange to optimise performance.

11 Vee belt drive offers additional overload pro

Mobile conveyors feeding cone blender.

Feeding ISO containers with plastic granules.

Vertical conveyor feed from sack tip station with screw feeder outlet and integral dust extraction system.

Manual sack tipping into mixer using vertical conveyor and integral feed screw.

2

riggered bearings to prolong bearing life.

ension screws ensure easy
ent for maintenance purposes.

otor drive allows for speed selection
performance and prolong life.

urised double seal for use
purging is required.

ed screw offers low headroom
vell as consistent feeding
rials, such as TiO_2.

ction systems conform to
irements.

asy access for
clean out.

sitions
conditions.

s steel.

ments

otection.

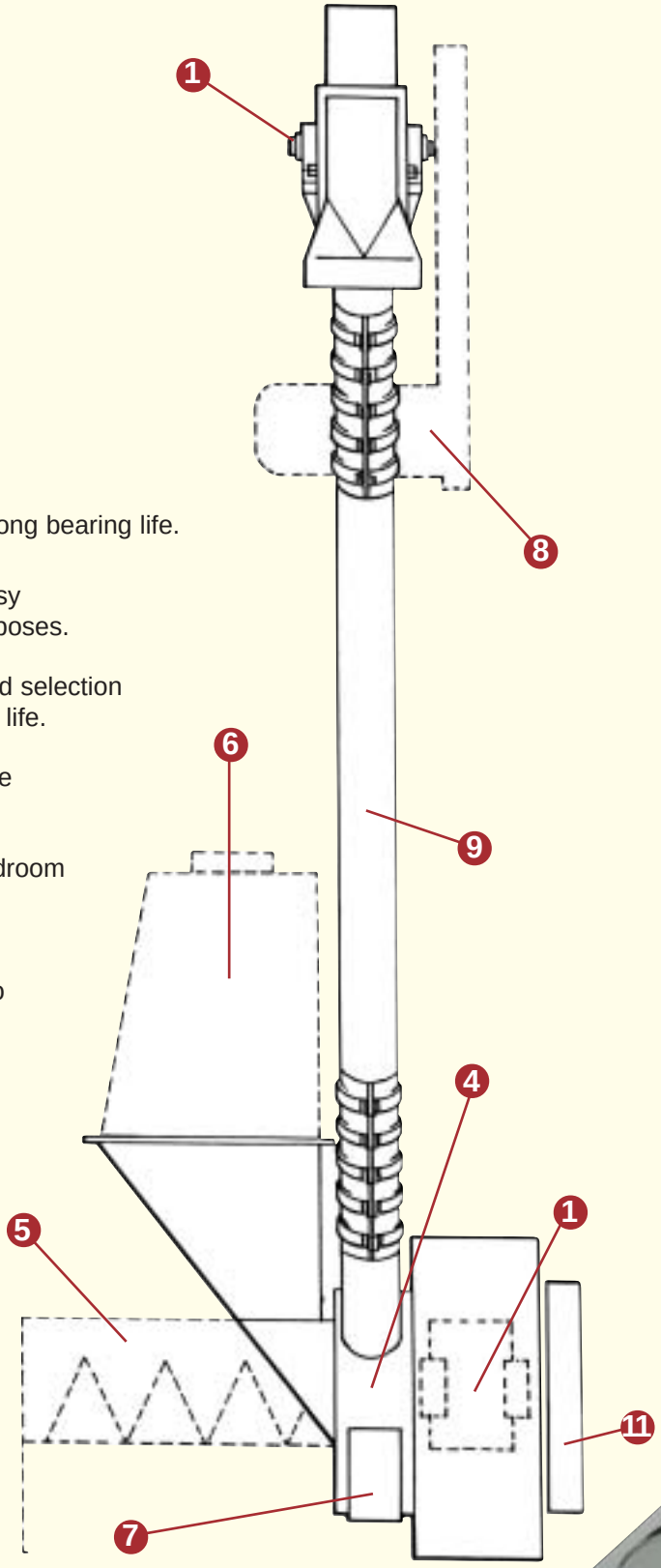

Materials Handled

Adipic acid
Aluminium chloride
Aluminium oxide
Asbestos fines
Barytes
Bentonite
Bran
Brown sugar
Calcium carbonate
Carbon black
Cement
Coffee beans
Coffee grounds
Crop seeds
Curry powder
Custard powder
Dehydrated foods
Detergent powders
Dog biscuits
Flocculents
Gelatine
Gram flour
Granulated sugar
Gypsum
Icing sugar
Iron oxide
Lead oxide
Lead shot
Limestone powder
Magnesium oxide
Melamine powder
Milk powder
Moulding powder
Perlite
Phthalic anhydride
Pigments
Plastic chips
Plastic granules
Potato flour
Refractory powder
Resins
Salt
Sand
Silica
Snuff (Tobacco fines)
Soap granules
Sodium sulphate
Soya flour
Starch
Sterilising powder
Sugar beet pulp dust
Talcum powder
Tile dust
Titanium dioxide
Urea prills
Water treatment powders
Wheat flour
Yeast extract
Zinc oxide
Zirconium sand

The Laminar Disc:
A 3-part disc with nylon 'bosses' and polyurethane centre.

The Powderflight Disc:
A 2-part easily replaced disc.

Horizontal/vertical multi-path conveyor.

TYPICAL DIMENSIONS

	M75	M100	M125
A	76	102	127
B	365	485	513
C*	x150	x200	x200
D	175	200	250
E	250	330	345
F	200	260	255
H	800	900	650
J	180	220	n/a

* *Multiples of*

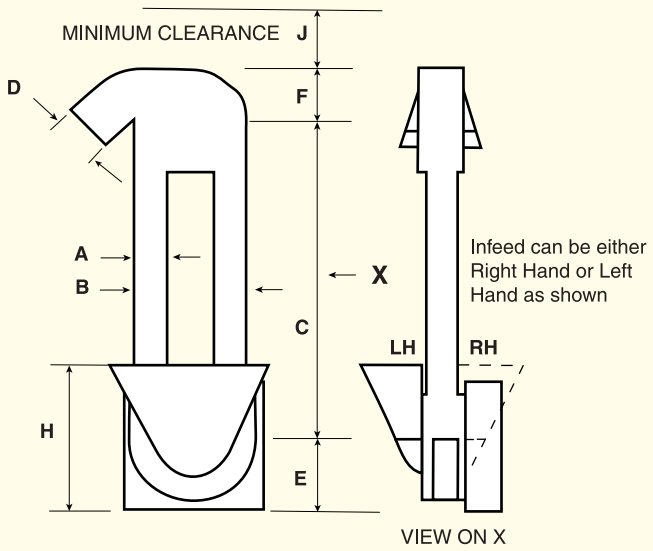

CONVEYOR CAPACITIES

During conveying, powders are subjected to turbulence and aeration, which in effect reduce their bulk density. Since we recommend no more than 50% to 60% loading by volume, a realistic output can be estimated by multiplying the swept volume given in the table, by the bulk density and dividing by 4. Product characteristics can affect output, up or down. We recommend testing of all products to ensure accuracy.

TEST FACILITY

Our in-house facility is available for testing with customers' materials, at our Glossop site.

SWEPT VOLUME: LITRES/MIN

R.P.M.	M75	M100	M125
90	330	730	910
150	540	1190	1480
190	680	1500	1875
240	870	1900	2375

e.g. Talc at 0.8 kg/litre :
M100 at 190 rpm output :

$$\frac{1500 \times 0.8}{4} = 300 \text{ kg/min}$$

(This figure has been exceeded by 30% on test.)

OTHER PRODUCTS FROM THE UNITRAK POWDERFLIGHT RANGE

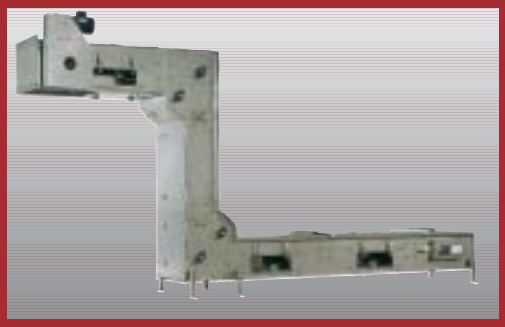

'TipTrak' bucket elevator

'Bagstander' FIBC Discharge System

'Screwfeeder' with agitated in-feed hopper

ISOQAR QUALITY ASSURED ISO 9001 — UKAS QUALITY MANAGEMENT 026

Certificate No. 4864/05

UNITRAK POWDERFLIGHT

Striving to exceed our customers' expectations...

Dinting Lane Industrial Estate, Glossop, Derbyshire SK13 7NU, UK
Tel: +44 (0)1457 865038 Fax: +44 (0)1457 869776 Email: info@unitrak.co.uk Web site: www.unitrak.co.uk